State of New Jersey
Department of Environmental Protection

CHRIS CHRISTIE
Governor

KIM GUADAGNO
Lt. Governor

BOB MARTIN
Commissioner

PROJECT SOLICITATION

OVERALL GOAL

The State of New Jersey, as a potential beneficiary of the Trust established pursuant to the national Volkswagen settlement, intends to use its allocation from the mitigation trust to efficiently implement projects that reduce oxides of nitrogen (NOx) emissions in a cost effective and technically feasible manner. The implemented projects must meet the criteria of the Consent Decree. New Jersey is issuing this solicitation for project ideas to ensure a broad range of project ideas are considered. Additional opportunities will be provided for public input during the upcoming months.

Submissions must be received by January 31, 2018 and must contain all the information outlined in the "Project Proposals" section of this document.

ELIGIBLE PROJECTS

A general summary is below. Click here for comprehensive list and associated definitions.

Source Category	Emission Reduction Strategy	Allowed Expenditure Amount
1. Class 8 local freight trucks & port drayage trucks	Repower and replacement	Up to 40% for repower with diesel or alternative fuel or up to 75% (up to 100% if government owned) for repower with electric. Electric charging infrastructure costs are eligible expense. Up to 25% for replacement with diesel or alternative fuel or up to 75% (up to 100% if government owned) for electric replacement. Electric charging infrastructure costs are eligible expense.
2. Class 4-8 school bus, shuttle bus or transit bus	Repower and replacement	Same as row 1
3. Freight switching locomotives	Repower and replacement	Same as row 1
4. Ferries/Tugs	Repower	Same as row 1
5. Oceangoing vessels	Shorepower	Up to 25% for shore side infrastructure if non-government owned (up to 100% if government owned)

6. Class 4-7 local freight trucks	Repower and replacement	Same as row 1.
7. Airport ground support equipment	Repower and replacement	Up to 75% to repower or replace with electric (up to 100% if government owned). Electric charging infrastructure costs are eligible expense.
8. Forklifts and Port Cargo Handling Equipment	Repower and replacement	Up to 75% to repower or replace with electric (up to 100% if government owned). Electric charging infrastructure costs are eligible expense.
9. Electric vehicle charging stations or hydrogen fueling stations for light duty vehicles only		Up to 100% to purchase, install and maintain infrastructure if available to public at *government owned* property. Up to 80% to purchase, install and maintain infrastructure if available to public at *non-government owned* property. Up to 60% to purchase, install and maintain infrastructure at a workplace or multi-unit dwelling that is not available to the general public. Up to 33% to purchase, install and maintain infrastructure for publicly available hydrogen dispensing that is high volume or up to 25% for lower volume.

PROJECT PROPOSALS

Proposals must be submitted by close of business on January 31, 2018. Electronic submittals are preferred and should be sent to VWComments@dep.nj.gov however paper submittals will also be accepted and should be sent to:

NJDEP
Division of Air Quality
Mail code 401-02E
Trenton, NJ 08625-0420
Attn: VW Settlement

All proposals must contain the following information; incomplete applications will not be considered. If your project is selected, you may be contacted for additional detailed information. Send questions to VWComments@dep.nj.gov

To enter information electronically use Adobe Reader

CONTACT INFORMATION

Organization Name	ChargePoint, Inc.
Organization Address	254 E. Hacienda Ave.
City, State Zip Code	Campbell, CA 95008
Contact Person	Dedrick Roper
Title/Position	Director, Public-Private Partnerships
Phone	(669) 237-3205
E-mail	dedrick.roper@chargepoint.com

PROJECT NAME	Newark DC fast charging hubs

PROJECT CATEGORY OR CATEGORIES (choose from 1-9 in "Eligible Projects" section above)

1 ☐ **2** ☐ **3** ☐ **4** ☐ **5** ☐ **6** ☐ **7** ☐ **8** ☐ **9** ☑

PROJECT PRIORITY Priority # 2 of 3 proposals

If submitting more than one proposal, what is the sponsor's priority of this proposal?

PROJECT BUDGET $ 2,985,444.00

Provide total estimated project budget, include source and amount of cost share if applicable.

The project budget includes $542,741 in-kind charger products and services from ChargePoint and $60,000 in-kind labor from Bryan Electric, for a total cost share of $602,741.

PROJECT DESCRIPTION (Briefly describe the project by completing the following questions)

Geographic area where emissions reductions will occur? See Supplemental Page 1

Estimated size of population benefitting from the emission reductions? 12,990,329

Estimated useful life of the project? 15 years

Number of engines/vehicles/vessels/equipment included in the project? 24

Estimated emission benefits should be expressed in tons per year (TPY) of emission reduced for NOx and for PM 2.5 over the lifetime of the project. Identify methodology used.

Estimated NOx benefits? 4.83 TPY

Methodology Used? See Supplemental Page 1

Particulate matter (PM 2.5) benefits? 0.03 TPY

Methodology Used? See Supplemental Page 1

Will the project benefit one or more communities that are disproportionately impacted by air pollution? If so, please describe.

The project will benefit communities that are disproportionately impacted by air pollution including Elizabeth, Union, Bayonne, and Bloomfield. See the "Site Detail" section of the Supplemental Pages for PM 2.5 and Ozone indexes for each proposed community.

Project partners, if any? Bryan Electric of Trenton a local Electrical contractor, Royal Farms, Stop N Shop and Burger King
Explain how the project will provide cost effective and technically feasible emission reductions. Cost effectiveness should be expressed in dollars per ton per year of emissions reduced for NOx and for PM 2.5. Using a grant project cost of $2,382,702, we calculate it will cost $32,821.14 per ton of NOx emissions reduced. Over the 15-year useful life of the equipment, that cost is $2,188.08 per ton of NOx per year. We calculate that the project would cost $5,547,573.97 per ton of PM 2.5 reduced. Over the 15 year useful life of the equipment, that cost would be $369,838.26 per ton of PM 2.5 per year
Estimated timeframe for implementation? Include a project timeline that identifies start and end dates, as well as the timeframe for key milestones. The schedule is based upon a start date of March 2019. All locations will be operational by May 2020: 1) Site License Agreements: Start Date March 2019 completed with any New Jersey specific license terms by July 2019; 2) Utility Design, Engineering, Permits: Start Date July 2019 completed on an ongoing basis through January 2020; 3) Construction: Start date January 2020, completed by May 2020; 4) Operational Status: All locations complete and in full operation by May 2020
Demonstrated success in implementing similar projects? ChargePoint operates the largest EV charging network in the U.S., with more than 58,500 total charging spots including more than 950 DC fast chargers. We partnered with BMW/VW to install 95 DC fast chargers from Portland to San Diego and Boston to Washington D.C. Grant programs include 118 DC fast chargers along California highways, 4,600 Level 2 charging spots in partnership with the Department of Energy, 14 DC fast chargers in Maryland and 206 multifamily charging spots in San Diego County.
If your proposed project involves alternative fuels, provide a demonstration of current or future plans to provide adequate refueling infrastructure. Not applicable. Our proposed project includes electric vehicle charging infrastructure for light-duty electric vehicles (Category 9).
Has your organization been approved to receive and expend any other grant funds related to this project? If so, please provide details. No, our organization has not been approved to receive and expend any other grant funds relate to this project.
Please provide any additional information that supports this project. Founded in 2007, ChargePoint is the only charging technology company that designs, develops, and manufactures hardware and software solutions across every category. ChargePoint is well suited to deliver a turnkey solution to NJDEP designed for speed in execution and sustainability. ChargePoint has leveraged its proven site selection process to secure sites that will provide the greatest environmental benefit. Additional information may be found in the following Supplement Pages.

Two additional pages have been provided as supplemental space to answer any of the questions above.

Counties where emissions reductions will occur:

1. Hudson County
2. Passaic County
3. Bergen County
4. Essex County
5. Union County
6. Middlesex County
7. Monmouth County
8. New York County

Estimated emissions benefit methodology:

NOx emissions reduction calculation:

We estimate the project will dispense 1,979,873.28 kWh over the 15 year life of the equipment. We arrived at this estimate based on average utilization data from more than 950 DC fast chargers on the ChargePoint Network. Utilizing a conservative estimate of 3.2 mi traveled per kWh delivered, we are able to estimate the total number of equivalent miles driven that the project will support.

In 2008, the EPA published the “Average Annual Emissions and Fuel Consumption for Gasoline-Fueled Passenger Cars and Light Trucks Emissions Facts” study that states that NOx emissions are calculated at .693g/mi. Thus, ChargePoint multiplied the estimated number of total miles supported by the project and multiplied those miles by the EPA NOx calculation to provide the estimated, metric tons of NOx emissions reduced per year.

PM 2.5 emissions reduction calculation:

We estimate the project will dispense 1,979,873.28 kWh over the 15 year life of the equipment. We arrived at this estimate based on average utilization data from more than 950 DC fast chargers on the ChargePoint Network. Utilizing a conservative estimate of 3.2 mi traveled per kWh delivered, we are able to estimate the total number of equivalent miles driven that the project will support.

In 2008, the EPA published the “Average Annual Emissions and Fuel Consumption for Gasoline-Fueled Passenger Cars and Light Trucks Emissions Facts” study that states that PM 2.5 emissions are calculated at .0041 g/mi. Thus, ChargePoint multiplied the number of total miles supported by the project and multiplied it by the EPA PM 2.5 calculation to provide the estimated, metric tons of PM 2.5 emissions reduced per year.

Overview

ChargePoint's regional site acquisition professionals, working with ChargePoint experts across the country, have engaged in a rigorous site selection process that considered a wide variety of factors including studies performed by ChargeEVC, distance between sites, distance from highway, sufficient parking spaces, safety, 24-hour access to charging stations, facility amenities, and suitability of site hosts. ChargePoint focused on areas that would be strategic from a utilization perspective, benefit environmentally challenged areas, be scalable throughout the State of New Jersey, as well as, provide the most effective costs on a per port deployment.

For the first phase of funding, ChargePoint proposes a strategy that focuses initial deployments in the most heavily concentrated areas of Electric Vehicle (EV) registration, proximity to high proportions of multi-family housing and aligned with areas of high Transportation Network Company (TNC) use (e.g., Lyft, Uber). This initial deployment is designed to have the most impact for the 1st phase of Volkswagen Settlement funding for the State of New Jersey. Subsequent ChargePoint proposals will be targeted toward extending the reach of the initial phase 1 deployment and enhancing the cost effectiveness of all proposals. This multi-tiered approach allows the State of New Jersey to address the areas of biggest impact first then fill in the gaps in later funding rounds. In this first phase ChargePoint will submit three separate project proposals focused in three different service territories – Camden, Newark and an intermediary corridor location in Bordentown. Deploying DC fast chargers in these locations will facilitate EV travel through and between the most populated areas of the state, have significant impact on NOx emissions especially within urban cores and along dense travel corridors where environmental justice communities are located. These charging stations will help ease range anxiety and create greater local and regional travel confidence, amongst existing and prospective EV drivers.

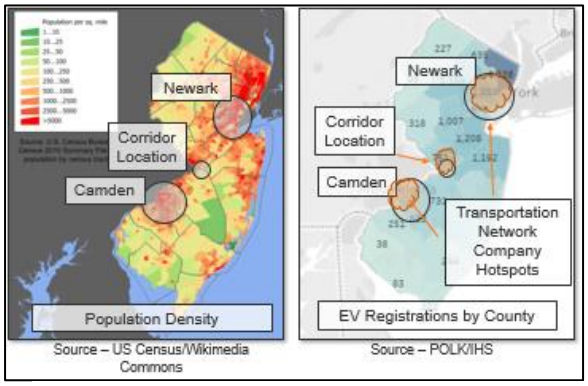

Figure 1 ChargePoint Phase 1 Proposed Statewide Strategy

ChargePoint's Newark area project proposal focuses on providing vital DC fast charging infrastructure at key routes for business travel, entertainment, and accessibility to areas with a high concentration of multifamily housing. ChargePoint has secured signed Memoranda of Understanding (MOU) with site hosts eager to begin rapid deployment of DC fast chargers at six locations in the Newark area. These include sites in Bayonne, Bloomfield, Hackensack, Morris Plains, Newark Airport and Union. In addition to the specific sites indicated in the supplemental section of the proposal, ChargePoint has numerous backup locations with site host MOUs in place. Final definitive site license agreements will be completed once all relevant New Jersey DEP pass through terms and conditions have been incorporated.

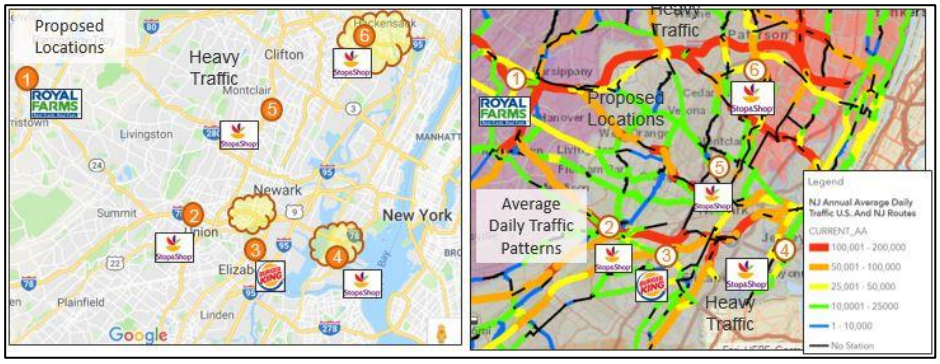

Figure 2 Newark Area EV Charging Locations and Ancillary Data

Business Model

ChargePoint will deliver a turnkey solution to the State of New Jersey, tailored to the unique needs of each site host, and backed by a maintenance and support plan for maximum driver and site host satisfaction. This solution will include the industry's most advanced and durable hardware, intuitive mobile app, and dedicated driver and station support teams. ChargePoint's business model reflects the company's experience and understanding in site host needs and ensuring long-term viability and operation of the site.

Each of the selected Newark site hosts prefer that ChargePoint assume full ownership and responsibility for the EV charging services at their property. In this case, ChargePoint will establish a license to operate the EV chargers on the host's property. ChargePoint will be responsible for setting prices and paying all operational expenses, including ongoing electricity costs. ChargePoint will be responsible for providing Network Services, 24/7 driver support and all required maintenance to uphold at least 98% equipment uptime. Services far beyond a standard warranty are provided through the ChargePoint Assure program. Assure is the industry's most comprehensive maintenance and management program, which includes all costs associated with maintenance and repair of the charging stations due to a manufacturing defect, accident, or vandalism.

With comprehensive network and support services provided by ChargePoint, drivers will enjoy the same user experience and support if stations are owned by site hosts or directly by ChargePoint. This electric vehicle service provider (EVSP) business model enables ChargePoint to ensure the EV charging infrastructure is continuously operated for the full term of the program, with minimized risk, regardless of challenging operational expenses such as utility demand charges.

Construction and Upgradable Site Design

At each location, ChargePoint will install four state-of-the-art ChargePoint Express 250 chargers. Each charger will be capable of dispensing a minimum of 62.5 kW per vehicle when initially installed. The platform and site will be designed in a manner that easily allows more power to be added to each charger in the future. Each site will be upgradable to achieve power levels exceeding 300kW per vehicle without the need to do more trenching and conduit runs making the site fully future proofed for vehicles in the near term as well as the distant future.

This initial scope covers the needs for nearly all commercially available passenger EVs on the road today, maximizes the number of chargers that can be installed with VW Settlement funding, and provides an easy upgrade path for ChargePoint to add more power with our own funding in the future as vehicles that can charge at higher levels become more prominent on the road (see Initial Site Design below).

The Express platform is driver-friendly with a 10" LCD touchscreen for interaction and display of car charging status and instructional videos. Swing arms make it easy to reach vehicle charging ports and area lighting improves safety. The Express platform has universal compatibility so any EV with fast charging capabilities can be charged with standard connectors.

Initial Site Design

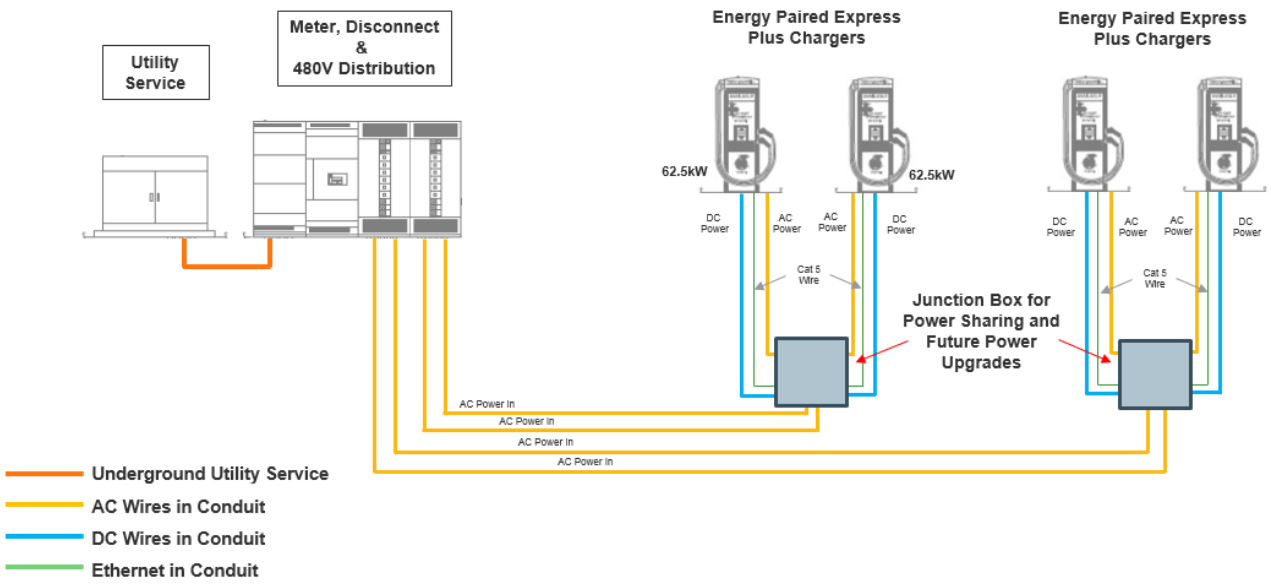

By carefully planning and constructing the site as described above, it will allow much lower costs in the future when upgrading to add more power. Once upgraded, each pair of chargers will share 312kW of power in modular Power Blocks. The 312kW of power can be split evenly between two cars or allocated in 31.25kW increments to either vehicle depending on demand. If only one car is charging on a given pair, the vehicle would have all 312kW available for that vehicle if the vehicle is capable. Future power upgrades will be at ChargePoint's discretion based on utilization and power demand.

Site Upgraded for Higher Power Levels

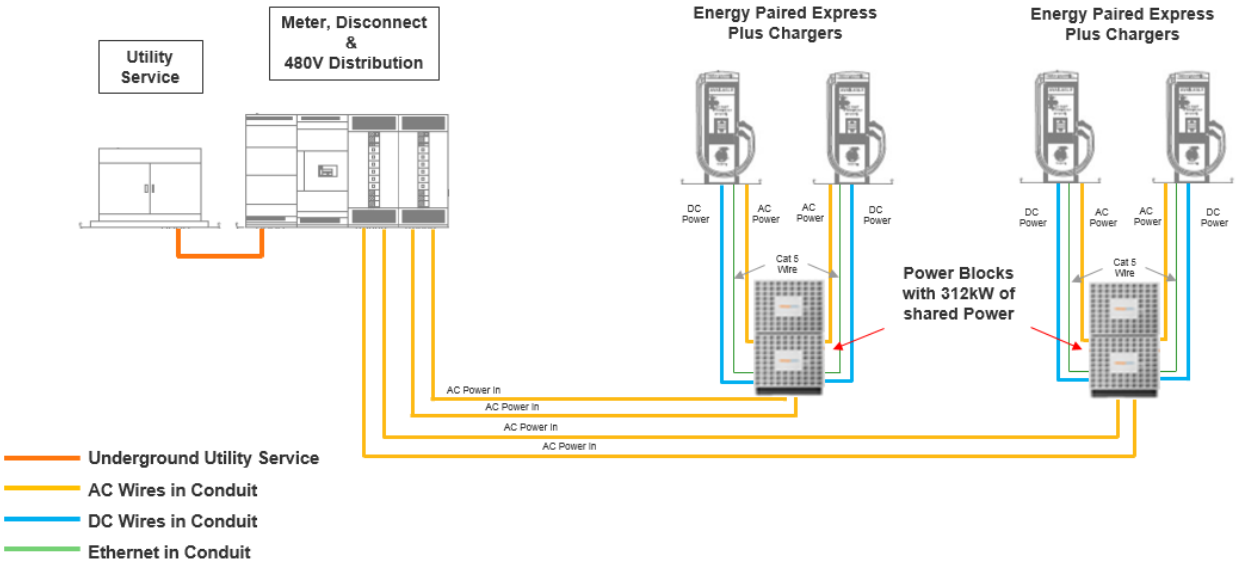

Site Detail

Location #1 - Royal Farms, 255 Speedwell Ave, Morris Plains, NJ 07950

Environmental Impact:

Selected Variables	State Percentile	EPA Region Percentile	USA Percentile
EJ Indexes			
EJ Index for PM2.5	39	33	34
EJ Index for Ozone	39	32	32

Source: EPA EJSCREEN Report (Version 2018)

Justification and Nearby Amenities:

This proposed location impacts an area that ranked 39% and 33% for PM 2.5 and Ozone respectfully. Located within along Route 202 and near an interexchange to I-287, this high volume traffic location serves as an easy access charging spot for travelers heading to tourist attractions, interstates, shopping and restaurants. This location is situated on a primary commuter travel route from the City of Morristown heading east toward Newark and New York City or south towards Trenton. Serving a popular shopping area with easy access to tourist destinations, corridor routes, and commuter routes this is an ideal location for transportation network company drivers, regional commuters and local EV drivers. The location offers 24/7 access to restrooms and food. Nearby daily traffic averages range between 100,000-200,000.

Site License Status:

Memorandum of Understanding in place with the site host. A definitive agreement will be executed with the host after New Jersey DEP award to ensure relevant pass through terms of NJ contract are included.

Electrical Supply:

Jersey Central Power & Light is the local service provider. Three phase power located on utility pole approximately 30ft. from designated installation location to minimize installation costs.

EVSE Configurations:

- Four (4) CPE 250 DC fast chargers (62.5 kW each)
- Appropriate conduit and in-ground pull boxes installed at the site to allow for easy upgrades to higher charging speeds in the future (up to 312kW per vehicle)

Aerial photo and site plan:

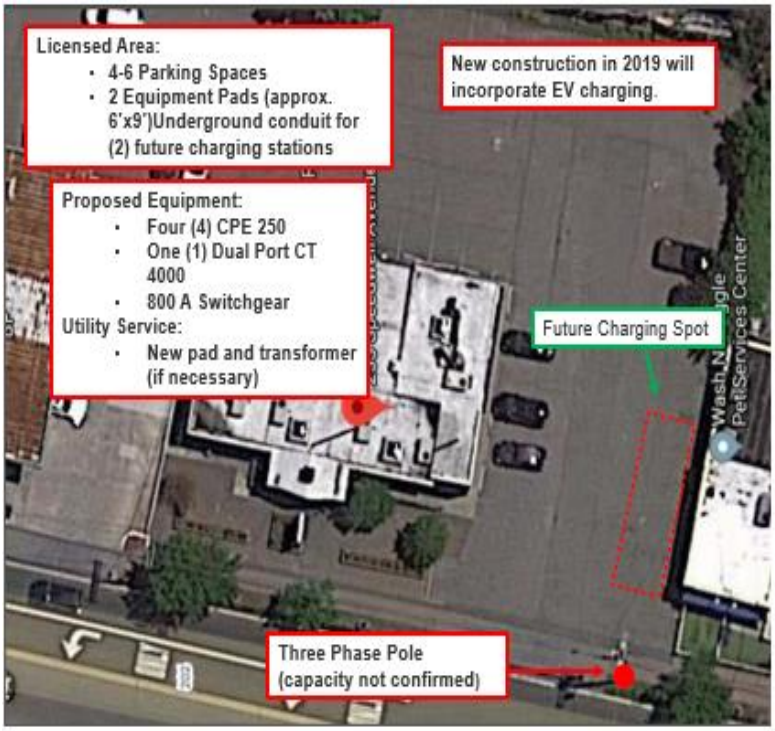

Location #2 - Stop & Shop, 1201 Stuyvesant Ave, Union, NJ 07083

<table>
<tr><td>Environmental Impact:</td><td>
<table>
<tr><th>Selected Variables</th><th>State Percentile</th><th>EPA Region Percentile</th><th>USA Percentile</th></tr>
<tr><td colspan="4">EJ Indexes</td></tr>
<tr><td>EJ Index for PM2.5</td><td>74</td><td>70</td><td>72</td></tr>
<tr><td>EJ Index for Ozone</td><td>73</td><td>69</td><td>72</td></tr>
</table>
Source: EPA EJSCREEN Report (Version 2018)
</td></tr>
<tr><td>Justification and Nearby Amenities:</td><td>This proposed location impacts an area that ranked 74% and 73% for PM 2.5 and Ozone respectfully. Located within .5 miles of an interchange of Garden State Pkwy and 1.5 miles to I-78, this high volume traffic location serves as an easy access charging spot for travelers from Newark Airport, Newark and New York City. This location is situated on a primary travel route from the airport heading north towards Newark or north east towards Jersey City or New York City. Serving a densely populated area with easy access to popular shopping areas, corridor routes, major employers and the airport make this an ideal location for transportation network company drivers, regional commuters and local EV drivers. The location offers 6am - midnight access to restrooms and food. Nearby daily traffic averages range between 50,000-100,000 on the Garden State Parkway and 100,000-200,000 on I-78.</td></tr>
<tr><td>Site License Status:</td><td>Memorandum of Understanding in place with the site host. A definitive agreement will be executed with host after New Jersey DEP award to ensure relevant pass through terms of NJ contract are included.</td></tr>
<tr><td>Electrical Supply:</td><td>PSEG is the local service provider. Three phase power located on utility pole approximately 60ft. from designated installation location to minimize installation costs.</td></tr>
<tr><td>EVSE Configurations:</td><td>• Four (4) CPE 250 DC fast chargers (62.5 kW each)
• Appropriate conduit and in-ground pull boxes installed at the site to allow for easy upgrades to higher charging speeds in the future (up to 312kW per vehicle)</td></tr>
<tr><td>Aerial photo and site plan:</td><td> 
</td></tr>
</table>

Location #3 - Newark Airport – Burger King, 669 Spring Street, Elizabeth, NJ 07201

Environmental Impact:

Selected Variables	State Percentile	EPA Region Percentile	USA Percentile
EJ Indexes			
EJ Index for PM2.5	87	84	84
EJ Index for Ozone	86	84	85

Source: EPA EJSCREEN Report (Version 2018)

Justification and Nearby Amenities:

This proposed location impacts an area that ranked 87% and 86% for PM 2.5 and Ozone respectfully. Located within 1 mile of an interexchange to I-95 and Newark Airport, this high volume traffic location serves as an easy access charging spot for travelers from New York City to Philadelphia. This location is situated on a primary travel route for anyone heading to the airport. Serving a heavy concentration of multi-family housing with easy access to shopping, the airport and corridor routes this is an ideal location for transportation network company drivers, regional commuters and local EV drivers. The location offers 24/7 access to restrooms and food. Nearby daily traffic averages range between 100,000-200,000.

Site License Status:

Memorandum of Understanding in place with the site host. A definitive agreement will be executed with host after New Jersey DEP award to ensure relevant pass through terms of NJ contract are included.

Electrical Supply:

PSEG is the local service provider. Three phase power located on utility pole approximately 5ft. from designated installation location to minimize installation costs.

EVSE Configurations:

- Four (4) CPE 250 DC fast chargers (62.5 kW each)
- Appropriate conduit and in-ground pull boxes installed at the site to allow for easy upgrades to higher charging speeds in the future (up to 312kW per vehicle)

Aerial photo and site plan:

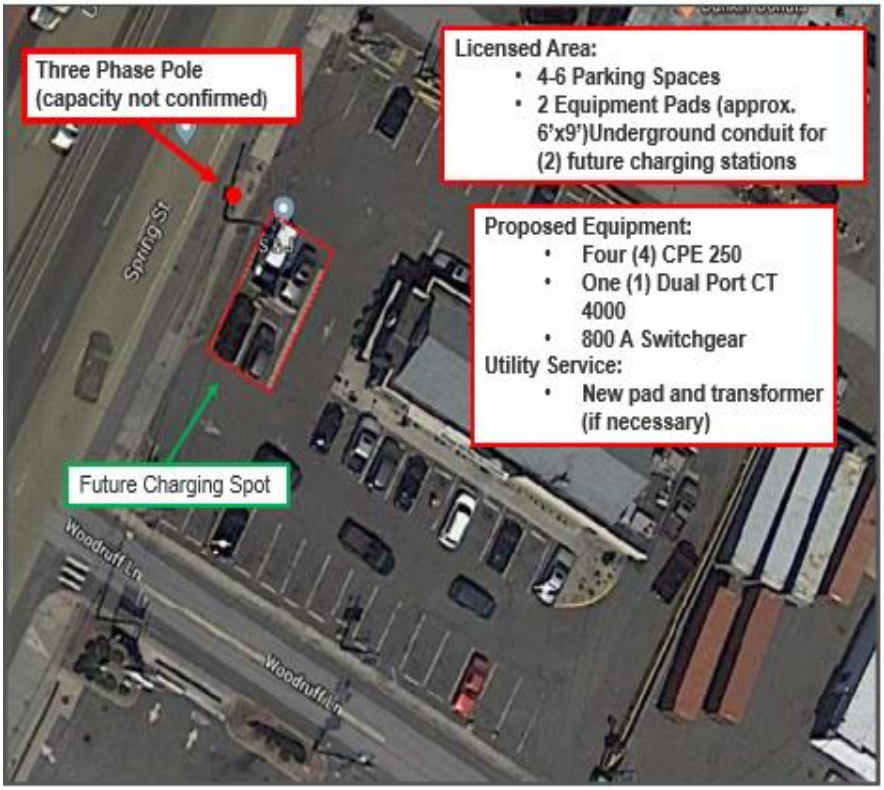

Location #4 - Stop & Shop, 1 Lefante Way, Bayonne, NJ 07002

Environmental Impact:

Selected Variables	State Percentile	EPA Region Percentile	USA Percentile
EJ Indexes			
EJ Index for PM2.5	78	74	76
EJ Index for Ozone	77	73	76

Source: EPA EJSCREEN Report (Version 2018)

Justification and Nearby Amenities:

This proposed location impacts an area that ranked 78% and 77% for PM 2.5 and Ozone respectfully. Located just off Route 440 and within 1 mile of an interexchange to I-78, this high densely populated area serves as an easy access charging spot for travelers from Newark, Jersey City, Staten Island and New York City. This location is situated on a primary travel route from the Jersey City or Newark heading south towards Staten Island or east to NYC. Serving a heavy concentration of multi-family housing with easy access to entertainment areas and corridor routes this is an ideal location for transportation network company drivers, regional commuters and local EV drivers. The location offers 6am - midnight access to restrooms and food. Nearby daily traffic averages range between 30,000-100,000.

Site License Status:

Memorandum of Understanding in place with the site host. A definitive agreement will be executed with host after New Jersey DEP award to ensure relevant pass through terms of NJ contract are included.

Electrical Supply:

PSEG is the local service provider. Three phase power located on utility pole approximately 200ft. from designated installation location to minimize installation costs.

EVSE Configuration:

- Four (4) CPE 250 DC fast chargers (62.5 kW each)
- Appropriate conduit and in-ground pull boxes installed at the site to allow for easy upgrades to higher charging speeds in the future (up to 312kW per vehicle)

Aerial photo and site plan:

Location #5 - Stop & Shop, 8 Franklin Street, Bloomfield, NJ 07003

Environmental Impact:

Selected Variables	State Percentile	EPA Region Percentile	USA Percentile
EJ Indexes			
EJ Index for PM2.5	81	77	79
EJ Index for Ozone	80	77	79

Source: EPA EJSCREEN Report (Version 2018)

Justification and Nearby Amenities:

This proposed location impacts an area that ranked 81% and 80% for PM 2.5 and Ozone respectfully. Located within 1 mile of an interexchange to the Garden State Parkway and McCarter Hwy, this high volume traffic location serves as an easy access charging spot for travelers from East Orange, Newark, Clifton and Passaic. This location is situated on a primary travel route from the City of Bloomfield heading south towards Newark. Serving a heavy concentration of multi-family housing with easy access to entertainment areas, corridor routes, and the City of Bloomfield this is an ideal location for transportation network company drivers, regional commuters and local EV drivers. The location offers 6am to midnight access to restrooms and food. Nearby daily traffic averages range between 100,000-200,000.

Site License Status:

Memorandum of Understanding in place with the site host. A definitive agreement will be executed with host after New Jersey DEP award to ensure relevant pass through terms of NJ contract are included.

Electrical Supply:

PSEG is the local service provider. Three phase power located on utility pole approximately 15ft. from designated installation location to minimize installation costs.

EVSE Configurations:

- Four (4) CPE 250 DC fast chargers (62.5 kW each)
- Appropriate conduit and in-ground pull boxes installed at the site to allow for easy upgrades to higher charging speeds in the future (up to 312kW per vehicle)

Aerial photo and site plan:

Location #6 - Stop & Shop, 380 W. Pleasantview Ave, Hackensack, NJ 07601

Environmental Impact:

Selected Variables	State Percentile	EPA Region Percentile	USA Percentile
EJ Indexes			
EJ Index for PM2.5	68	63	66
EJ Index for Ozone	67	63	65

Source: EPA EJSCREEN Report (Version 2018)

Justification and Nearby Amenities:

This proposed location impacts an area that ranked 68% and 67% for PM 2.5 and Ozone respectfully. Located just off of an interexchange to I-80, this high volume traffic location serves as an easy access charging spot for this densely populated area with commuters and travelers to Newark and New York City. This location is situated on a primary travel route from the City of Hackensack heading east toward New York City or south toward Newark. Serving a heavy concentration of multi-family housing with easy access to entertainment areas, corridor routes, and New York City this is an ideal location transportation network company drivers, regional commuters and local EV drivers. The location offers 6am - midnight access to restrooms and food. Nearby daily traffic averages range between 100,000-200,000.

Site License Status:

Memorandum of Understanding in place with the site host. A definitive agreement will be executed with host after New Jersey DEP award to ensure relevant pass through terms of the state contract are included.

Electrical Supply:

PSEG is the local service provider. Three phase power located on utility pole approximately 20ft. from designated installation location to minimize installation costs.

EVSE Configurations:

- Four (4) CPE 250 DC fast chargers (62.5 kW each)
- Appropriate conduit and in-ground pull boxes installed at the site to allow for easy upgrades to higher charging speeds in the future (up to 312kW per vehicle)

Aerial photo and site plan:

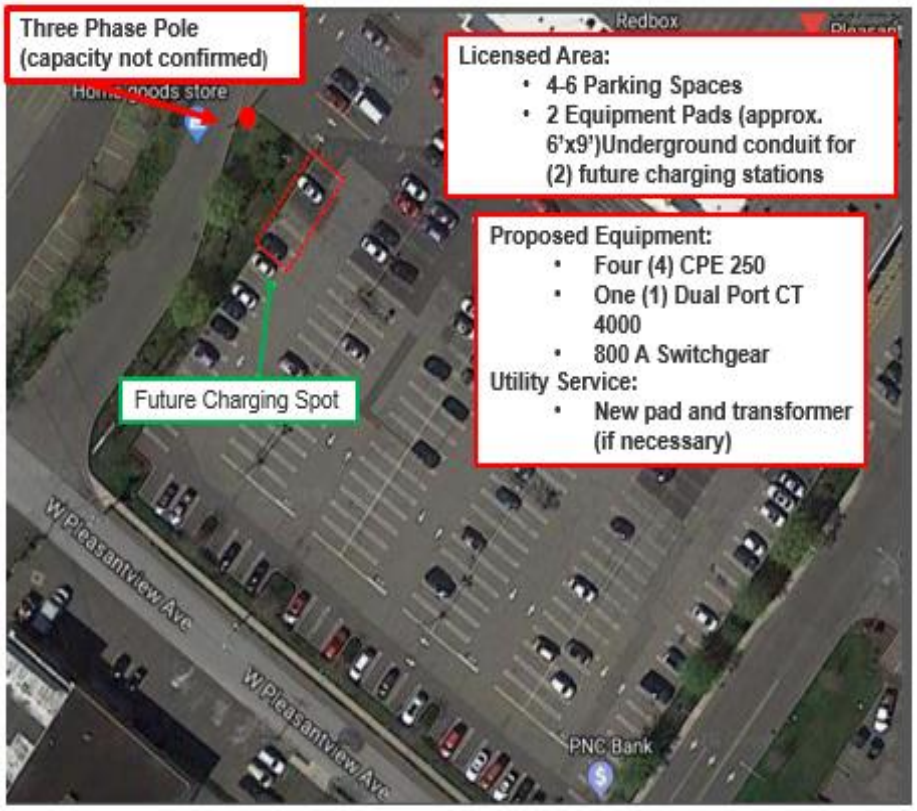

Express 250

The Future of DC Fast Charging

The ChargePoint Express 250 family is designed to meet the fast charging needs of today's and tomorrow's electric vehicles.

ChargePoint® Express 250 is based on industry-leading DC fast charging technology, engineered to fast charge current and next-generation electric cars, buses and trucks. Each station is equipped with two Power Modules that deliver up to 62.5 kW to a vehicle. The station supports legacy and future battery packs from 200V to 1,000V. High-efficiency power conversion (more than 96% efficiency) reduces electricity costs and wasted energy.

Stations can be equipped with up to two different connector types and an elegant cable management system keeps charging cable off the ground. Ergonomic, user-friendly design delights drivers and makes it easy and safe to charge. A 254 mm (10 in) LCD touchscreen lets drivers interact with instructions, information or promotions. A 508 mm (20 in) wide-format LED display notifies drivers of station availability and status. Integrated area lighting creates a safe and comfortable environment for drivers. The ChargePoint mobile app and in-dash systems tie everything together: drivers can locate stations, get in line to charge at busy stations, instantly start charging, see their charging status and track their activity over time.

Built-in cellular networking enables remote management of the station, while ChargePoint Cloud Services make it simple for station owners to customize charging stations to meet their specific requirements. Advanced features manage energy costs, support sophisticated pricing models, control who can access stations and more. Reports offer detailed information about station utilization and energy use, making it simple to plan for ongoing investments and growth. Automatic software upgrades ensure the latest features are always available to drivers and station managers.

Fault-tolerant design, instrumentation for remote monitoring and intelligent diagnostics allow the world-class ChargePoint support team to provide proactive alerts to prevent station outages and eliminate driver frustration.

Express 250 Station

Driver Engagement

- A mobile app or in-dash system makes it easy for drivers to manage all their charging activity
- Two displays optimize driver interaction, showing real-time station availability, state of charge, session pricing, energy dispensed, current wait times and more
- Integrated cable management keeps cables off the ground and safely out of the way of drivers
- Innovative swing arms increase charging cable reach and make it simple to plug in with one hand
- User interface supports touch control, works with gloves and resists vandalism
- 24/7 ChargePoint phone support ensures drivers are never stranded

Universal Compatibility

- Compatible with international electrical grid standards and vehicles (400–480V, 50–60 Hz)
- Up to two connectors per Express 250 Station support global standards: CHAdeMO, CCS1, CCS2; other connectors will be supported in the future

Cloud-Based Station Management

- Real-time station availability and details for drivers
- Access controls for managing who can use stations and when
- Total output power can be configured to manage electrical costs or meet site-specific requirements
- Seven different pricing models simplify tailoring pricing to specific driver groups
- Multiple authentication and/or payment methods match driver and business needs
- Secure collection of charging fees from drivers and automated remittance to station owners
- 24/7 monitoring and data gathering for detailed reports to understand trends
- Automatic software updates instantly expose the latest features and enhancements

High Availability and Serviceability

- Minimal moving parts increase reliability and minimize ongoing field service for maintenance
- Configurable levels of Power Module redundancy minimize downtime
- Power Module duty cycle management extends service life
- Modular components can be installed in the field without any specialized tools or expertise
- Instrumentation for remote monitoring, intelligent diagnostics and machine learning predicts failures and ensures high availability

When Charging is Mission Critical, Protect Your Investment with ChargePoint Assure

- **Minimize downtime:** ChargePoint Assure provides the most comprehensive EV Station maintenance and management in the industry
- **Get up and running quickly and flawlessly:** Professional guidance for station configuration saves you time, and unlimited changes to station policies flexibly supports your business
- **Eliminate unexpected future expenses:** Cost for parts and on-site labor to install is covered for all Assure eligible repairs
- **One less thing to worry about:** Proactive station monitoring provides you with regular reporting
- **Reduced risk of downtime:** We guarantee 98% annual uptime and one business day response to requests
- **Support when you need it:** We're there for you *and* your drivers. Phone support available for station owners Monday to Friday from 5 AM to 6 PM Pacific. Phone support for drivers is 24/7/365, so you never need to field a driver call

Mobile and In-Dash Integration

- Real-time availability of stations on the network
- Drivers can get in line to use busy charging spots
- Typical wait times help drivers determine the most convenient time to charge
- Charging status updates by the second with configurable desired state of charge

Express 250 Station

Cable management keeps cables off the ground and makes it easy to reach charging port in any location

Dimensions of 2,230 mm x 712 mm x 420 mm (7'4" x 2'4" x 1'4")

508 mm (20 in) LED display shows real-time availability, wait times, state of charge, station pricing and more

Stations can dispense up to 62.5 kW

254 mm (10 in) LCD touch display shows pricing, energy usage and more

Supports CHAdeMO, CCS1 and CCS2 connectors; other common connector types will be supported in the future

Configurable with up to two connectors per station

Power Module

- Self-contained AC to DC power conversion system
- Output range between 200V and 1,000V DC
- Delivers up to 31.25 kW at a max current of 78A
- Sealed units are easily field installed in Express 250 Stations